Bulletin BV1622j

COBRA-NECK®
Stainless Steel Ball Valves

U.S. Patent - 9,518,665

Made in U.S.A.

1˝ SSBV w/ Electronic Actuator (MCBV)

SSBV COBRA-NECK® BALL VALVE FOR INDUSTRIAL REFRIGERATION ¾” TO 3”

- Stainless Steel Construction
- 800 psig (55 bar) SWP
- Conforms to IIAR Valve Standard
- Ammonia, CO_2, Halocarbons, Secondary Refrigerants
- Lock-Out/Tag-Out Options
- Electronic and Pneumatic Actuators for Control

DESCRIPTION

HANTEMP Controls has re-engineered conventional ball valve designs including the use of an extended insulation valve neck to separate the insulated frosty valve body from its reliable upper stem seals. The unique valve design stops flow in both directions when closed without cavity pressure build-up. When equipped with an actuator, controller, and sensor, the COBRA-NECK® can be used for application as a pressure, temperature, flow, or liquid level control.

DESIGN

This innovative, patented ball valve has been specifically designed for industrial refrigeration using ammonia, CO_2, halocarbons, and secondary refrigerants. Unique features include stainless steel body construction for corrosion protection and shock resistance, as well as moderate weight compared to traditional carbon steel valves. In general, ball valves offer low pressure drop, unrestricted pipe flow to avoid liquid slugs, and timed opening/closing for improved control and moderation of system shock.

ADVANTAGES OF COBRA-NECK® BALL VALVES

Suction Lines & Liquid Overfeed Return Lines: Controlled opening and closing virtually eliminates liquid-slugging impacts which might result in cracking of system piping and fittings and evaporator manifolds. Lower pressure drop reduces energy costs. Can use smaller pipe sizes.

Hot Gas Lines: Avoidance of liquid slugging with slow opening and avoidance of condensed liquid puddling in-between defrosts. Can use smaller pipe sizes.

Liquid Lines: Gradual ball rotation avoids shock upon opening and closing.

Discharge Lines: Reduced pressure drop and ball’s straight-through flow saves power and avoids puddling.

Equalizer or Gravity Legs: Actuated ball valves require no piston pressure drop as is characteristic of pilot operated solenoid valves and regulators.

Stainless Steel Companion Flanges:
Available as standard. Not needed for HANTEMP weld in-line valve models.

SSBV Cross Section
(Drawing 200-16)

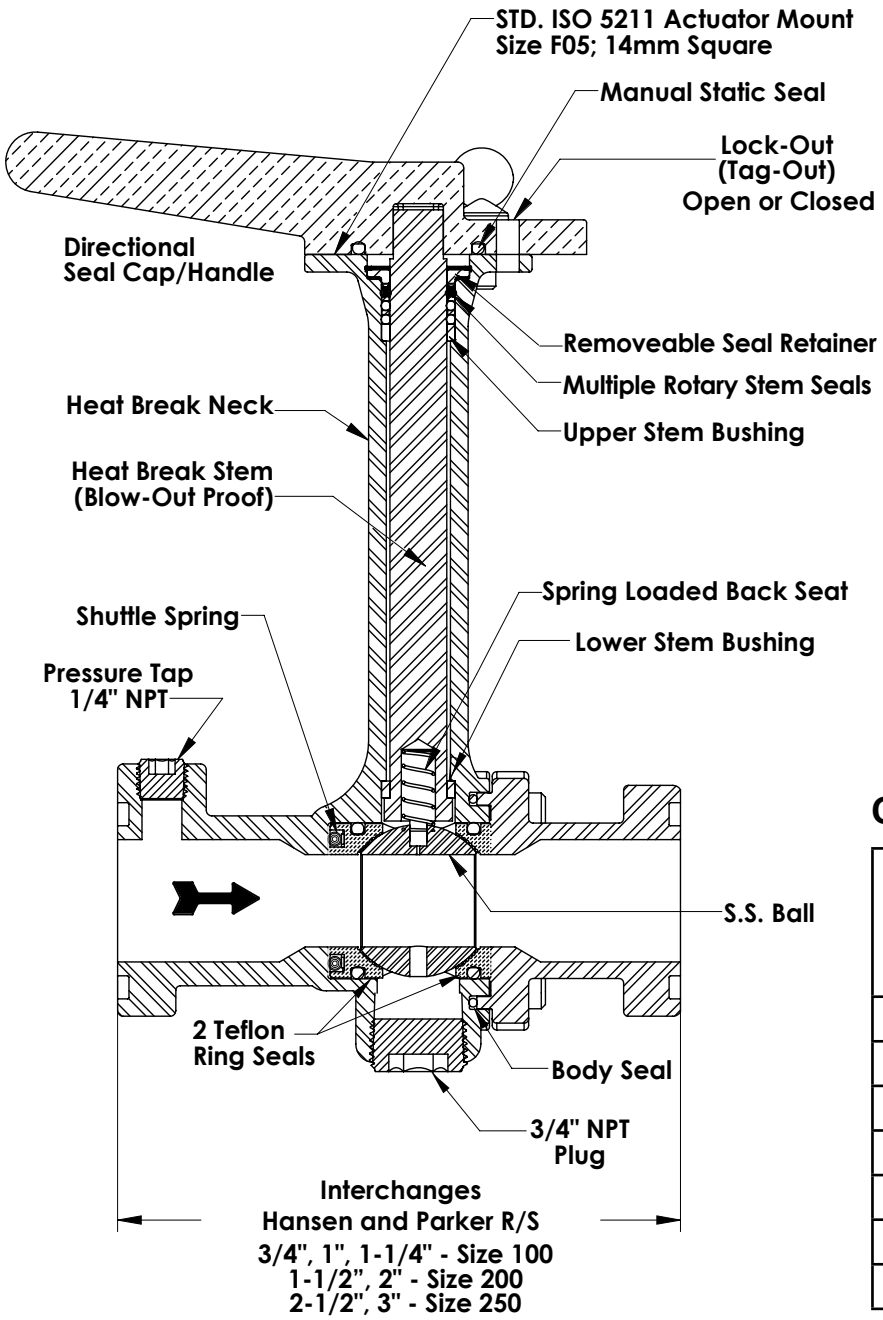

MATERIAL SPECIFICATIONS:

Body: Stainless Steel

Stem: Stainless Steel

Ball: Stainless Steel

Seal Ring: Teflon Proprietary; Tight Seating

Stem Bushings: Low Friction Composite

Back Seat Spring: Stainless Steel

Handle: Aluminum Alloy

Rotary Seals: Proprietary, Triple seal design

Fasteners & Plugs: Stainless Steel 300 Series

Ambient Temperature:
-40°F to 120°F (-57°C to 48°C)

Fluid Temperature:
-70°F to 240F (-57°C to 115°C)

Companion Flanges: Stainless Steel Standard (not needed for HANTEMP weld in-line models)

COBRA-NECK® Ball Valve Flow Cv

Size	COBRA-NECK® (full port ball profile)	Conventional "Globe" Solenoid Valves, Regulators
¾"	43.2	8
1"	48	12
1¼"	52.8	19
1½"	219	33
2"	250	50
2½"	275	78
3"	600	100

HANTEMP PROPRIETARY LIQUID EXPANSION SOLUTION

The HANTEMP Controls innovative patented design prevents the valve interior pressure from exceeding the higher of the inlet or outlet pipe pressures by utilizing a spring loaded floating ball. The stem region above the ball is also protected by a vent hole in the top of the ball and servicing oil drain hole in the bottom of the ball. This feature of the HANTEMP ball valve will not protect other regions of the piping system from expanding hydrostatic pressure.

Most ball valve designs - unlike the COBRA-NECK® from HANTEMP Controls - require a **bleed hole** drilled upstream in the ball to prevent excessive hydrostatic pressure and the potential disabling of the valve when closed. Hydrostatic damage is caused by trapped liquid, inside of a valve chamber, expanding due to the temperature coefficient of expansion of the liquid. This is especially true of ammonia because its temperature coefficient is greater than water and other refrigerants.

SSBV - FLANGED
INSTALLATION DIMENSIONS

¾" to 2½" connections available

¾" to 1¼" Ball Valves
(20mm – 32mm)

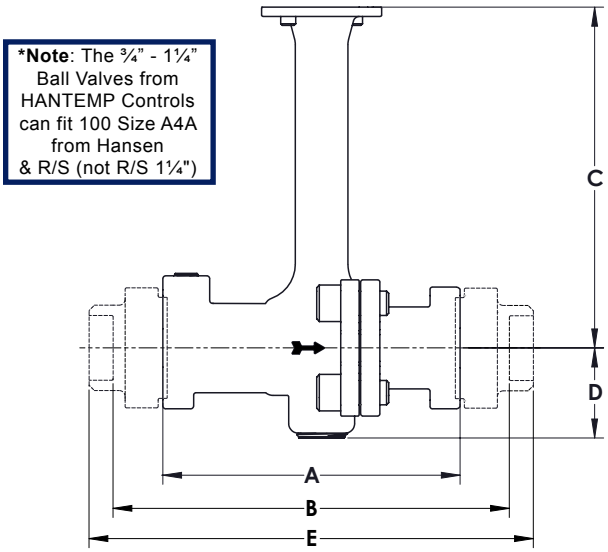

1½" to 2½" Ball Valves
(40mm – 60mm)

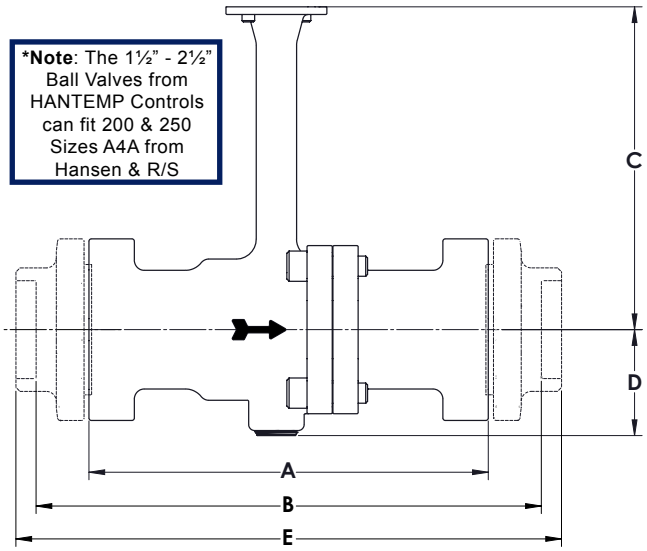

Dimensions						
Valve Size (mm)	**A (mm)**	**B (mm)**	**C (mm)**	**D (mm)**	**E (mm)**	**Weight (kg)**
¾" - 1¼" (20-32)	6.19" (157)	8.31" (211)	7.00" (178)	1.85" (50)	9.31" (236)	7.8 lbs (3.5)
1½" - 2½" (40-65)	9.88" (251)	12.50" (318)	8.00" (203)	2.63" (67)	13.50" (343)	19.2 lbs (8.7)

Mating Flange Pipe Sizes & Connections			
Connection Type	**Threaded**	**Socket Weld**	**Butt Weld**
Sizes Available	¾", 1", 1¼"1½", 2½"	¾" - 2½"	¾" - 3"

1˝ SSBV Flanged
w/ Manual Handle

3˝ SSBV Weld In-Line
w/ Manual Handle

SSBW - WELD IN-LINE
INSTALLATION DIMENSIONS

¾" to 3" connections available

¾" to 1¼" Ball Valves
(20mm – 32mm)

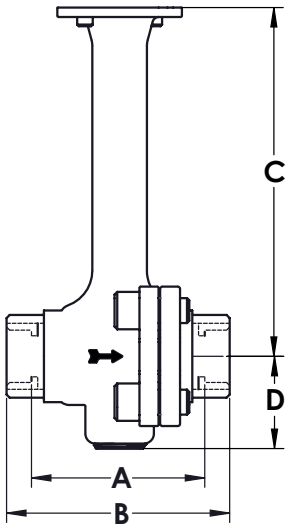

1½" to 2½" Ball Valves
(40mm – 65mm)

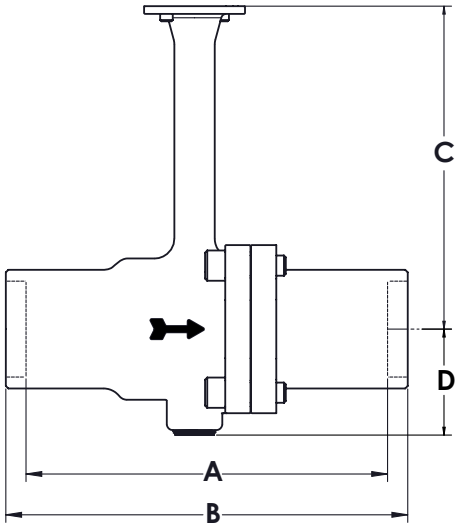

3" Ball Valves
(80mm)

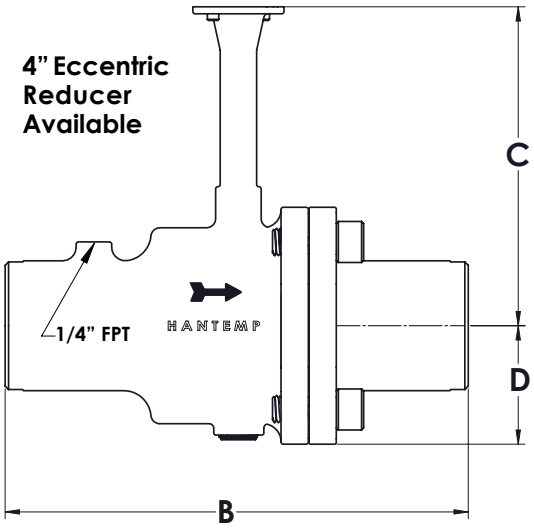

Dimensions					
Size (mm)	**A (mm) SW**	**B (mm) BW**	**C (mm)**	**D (mm)**	**Weight (kg)**
¾" - 1¼" (20-32)	3.48" (88)	4.48" (114)	7.00" (178)	1.85" (50)	5.2 lbs (2.2)
1½" - 2½" (40-65)	8.95" (227)	9.95" (253)	8.00" (203)	2.63" (67)	13 lbs (6)
3" (80)	N/A	12.70" (322)	8.75" (222)	3.25" (83)	30 lbs (14)

1˝ SSBV Weld In-Line w/ Electronic Actuator (MCBV)

2˝ SSBV Weld In-Line w/ Manual Handle

3" SSBV Weld In-Line w/ Electronic Actuator (MCBV)

Note: 3" SSBW with butt weld ends standard. Flanged models also available; contact factory for more information.

ACTUATOR OPTIONS

(See Bulletin MCBV1117 for more details)

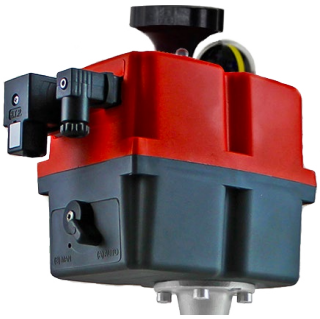

Electronic Actuator - typical

Pneumatic Actuator w/ spring return

DESCRIPTION

HANTEMP Controls offers electronic and pneumatic actuators for open/closed control of the ball valve's movement. The actuators are manufactured for valve compatibility with a standard F05 mounting connection, and are ideally suited for pairing with the COBRA-NECK® Stainless Steel Ball Valves. Electronic actuators from HANTEMP Controls include a manual override feature; other customization features, including modulating models, are also available.

ELECTRONIC ACTUATOR - FEATURES & SPECIFICATIONS

- Easily visible LED lights provide continuous status indication
- Multiple voltages available (12-24 VDC, 24 VAC, 115 VAC, 230 VAC)
- Open/Close control (standard)
- 4-20mA control input (optional)
- Fail-safe battery back-up (optional)
- Speed Control; for slow opening/closing (optional)
- Electric torque limiter protects against valve jams
- Ambient temperature motor heater
- Manual override with visual valve position indicator
- Electrical connections are through external DIN plugs; no need to remove cover during installation
- Two dry contact limit switches confirm open/closed valve position
- Rugged IP65 weatherproof housing

Note: Actuators can also be customized for a specific application. Contact the factory for more information.

PORT PROFILES

The conventional round ball profile (OP) provides maximum flow characteristics with minimal pressure drop, yet has a gradually exposed opening as the ball rotates. While this can provide accurate flow modulation, HANTEMP Controls has developed proprietary characterized ball profiles which can provide better regulation of flow (VP), or liquid expansion (TD)&(SL). These unique ball profiles are available upon request.

OPEN PORT (OP)

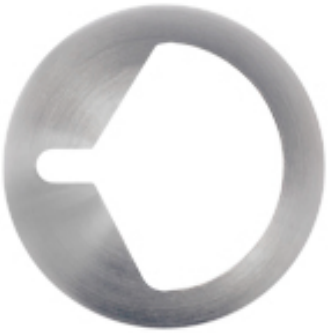

CHARACTERIZED V-PORT (VP)

TEAR-DROP PORT (TD)

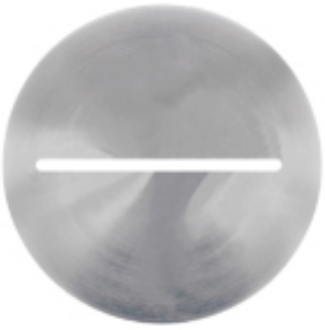

SLOTTED PORT (SL)

OP - Standard; Low ΔP Suction
VP - Variable Load Suction } **For Gases**
TD - Accumulator Level
SL - Direct Expansion } **For Liquids**

COBRA-NECK® BALL VALVE MAINTENANCE & SERVICE

INSTRUCTIONS (*see drawing #201-16 - page 7)*

The valve should only be serviced by an experienced refrigeration professional. Before servicing valves, close isolation hand valves so that containing pipe work can be properly evacuated to eliminate the risk of any exposure to system refrigerant. Loosen flange bolts slowly and, if the refrigerant line is not totally evacuated, tighten flange bolts and re-evacuate the line.

STEM SEAL REPLACEMENT

The rotary stem seal system can be removed with the stem in place and replaced while the valve is in service.

To service the rotary seals with the valve installed in pipe work, begin by closing and isolating the valve for safety. Next, remove the seal cap/handle or actuator. Check the seal area for remaining refrigerant; be sure the stem is back-seated fully. Then, remove the retaining ring (K); this may require a small standard screw driver to spread the retaining ring. Using an o-ring pick pull the retainer (U) from the body (A). The rotary seals can now be accessed and removed using an o-ring pick.

When installing the replacement stem seals, follow the correct seal placement order detailed in Drawing #2. First, insert the o-ring (L), followed by the split back-up ring (P). Then, the second o-ring (L), followed by the second split back-up ring (P). Next, insert the spring-energized Cantiseal (R). Finally, insert the retainer (U) and retaining ring (K). The retaining ring should be separated and pressed into the groove at the top of the valve body and snapped into place. Check for leaks before restoring valve.

Note: Replacement of the bushings (X) while the valve is connected to pipe work is not recommended.

BALL AND SEATS REPLACEMENT

To begin, close isolation valves and remove all refrigerant from the ball valve. Loosen the flange bolts and nuts and remove the valve from the pipe work. The COBRA-NECK™ Ball Valve body is composed of 2 main components: the valve body (A) and a bolt-on flange (B). Loosen and remove the 4 socket head cap screws (H). There is an o-ring (M) and gasket (Q) between the valve body (A) and the bolt-on flange (B); inspect these items and replace if worn. The downstream seat (E) is a Teflon ring with grooves cut into the seat area with an o-ring (O) around the circumference. To remove the downstream seat (E), turn the ball (C) to a half-open position, and then pull the seat (E) from the housing bore.

To remove the ball, rotate the ball by turning the valve stem (T) so the valve is in a closed position. While in a closed position, the ball (C) can be pushed out of the valve body (A). Next, remove the ¾" NPT plug (I) on the bottom side of the body (A) using a 9/16" hex key wrench. The Stem (T) can now be removed through the bottom of the valve body.

To remove the stem (T), push the top of the stem downwards and out through the ¾" NPT port. With the stem removed, the upstream seat (S) is now exposed.

The removable upstream seat (S) is a white Teflon ring. This seat includes an o-ring (O), a washer (F), and a spring (R). Most likely, the upstream seat will be damaged when removed. To remove, use a blunt, straight edge such as a standard screw driver to push the seat out of the valve body.

Before inserting the new ball into the valve body, check that the spring (W) is inserted into the bottom of the stem (T). With the spring in place in the bottom of the stem, align the stem prongs with the slot of the ball and gently push the ball into place. The ball should rotate smoothly when correctly in place. The downstream seat can now be pressed back into the housing bore by hand. If the downstream seat cannot be pressed back into the valve body, check that the ball has been properly installed and rotated.

BUSHING REPLACEMENT

To service the bushings (X), remove the valve from pipe work after pump-out. Follow the previous removal instructions from HANTEMP Controls for rotary seals and ball and seats to replace any damaged or worn bushings. With the lower bushing in place on the stem, slide the stem into the valve body from the bottom and through the rotary stem seal arrangement until the base of the stem is pushed up against the valve body. Refer to drawing #2 for correct bushing placement. Stem seals will require inspection and possible replacement as well.

PARTS DETAIL
(*Drawing #201-16*)

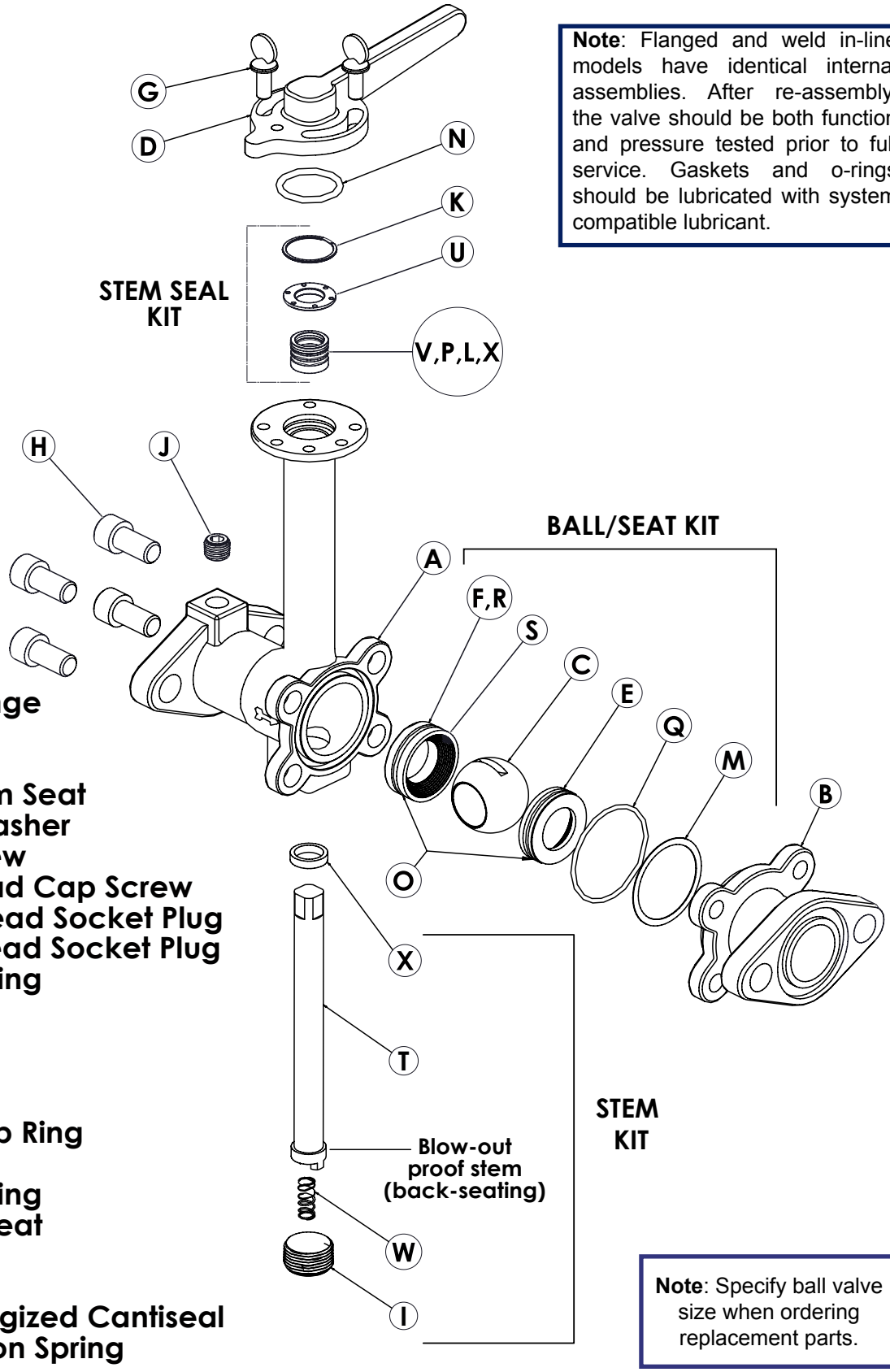

Note: Flanged and weld in-line models have identical internal assemblies. After re-assembly, the valve should be both function and pressure tested prior to full service. Gaskets and o-rings should be lubricated with system compatible lubricant.

Note: Specify ball valve size when ordering replacement parts.

A: Body
B: Bolt-On Flange
C: Ball
D: Handle
E: Downstream Seat
F: Ball Seat Washer
G: Thumb Screw
H: Socket Head Cap Screw
I: 3/4" Hex Head Socket Plug
J: 1/4" Hex Head Socket Plug
K: Retaining Ring
L: O-Ring
M: Gasket
N: O-Ring
O: O-Ring
P: Split Backup Ring
Q: O-Ring
R: Canted Spring
S: Upstream Seat
T: Stem
U: Retainer
V: Spring Energized Cantiseal
W: Compression Spring
X: Bushing

COBRA-NECK® BALL VALVE REPLACEMENT PARTS

(see Drawing #201-16 on page 7 for details)

Spare Parts ¾” - 1¼”		
Part Number	**Description**	**Included**
16-9001	Gasket Kit	M, Q, N, O, and 2 flange gaskets
16-9002	Ball/Seat Kit - OP	C (OP), E, O, S, F, R, M, Q, and 2 flange gaskets
16-9019	Ball/Seat Kit - VP	C (VP), E, O, S, F, R, M, Q, and 2 flange gaskets
16-9021	Ball/Seat Kit - TD	C (TD), E, O, S, F, R, M, Q, and 2 flange gaskets
16-9003	Stem Seal Kit	2 each - L, P, and X; 1 each - K, U; plus 2 flange gaskets
16-9004	Master Repair Kit	Stem Seal Kit, Gasket Kit, Ball/Seat Kit, 4 pieces position H, Stem Kit
16-9005	Seal Cap/Handle	D, N, and G (2 items); fits all sizes
16-9006	Stem Kit	X, T, W, and I

Spare Parts 1½” - 2½”		
Part Number	**Description**	**Included**
16-9007	Gasket Kit	M, Q, N, O, and 2 flange gaskets
16-9008	Ball/Seat Kit - OP	C (OP), E, O, S, F, R, M, Q, and 2 flange gaskets
16-9022	Ball/Seat Kit - VP	C (VP), E, O, S, F, R, M, Q, and 2 flange gaskets
16-9018	Ball/Seat Kit - TD	C (TD), E, O, S, F, R, M, Q, and 2 flange gaskets
16-9009	Stem Seal Kit	2 each - L, P, and X; 1 each - K, U; plus 2 flange gaskets
16-9010	Master Repair Kit	Stem Seal Kit, Gasket Kit, Ball/Seat Kit, 4 pieces position H, Stem Kit
16-9005	Seal Cap/Handle	D, N, and G (2 items); fits all sizes
16-9016	Stem Kit	X, T, W, and I

Spare Parts 3”		
Part Number	**Description**	**Included**
16-9012	Gasket Kit	M, Q, N, and O
16-9013	Ball/Seat Kit - OP	C (OP), E, O, S, F, R, M, and Q
16-9024	Ball/Seat Kit - VP	C (VP), E, O, S, F, R, M, and Q
16-9023	Ball/Seat Kit - TD	C (TD), E, O, S, F, R, M, and Q
16-9014	Stem Seal Kit	2 each - L, P, and X; 1 each - K, U
16-9015	Master Rebuild Kit	Stem Seal Kit, Gasket Kit, Ball/Seat Kit, 4 pieces position H, Stem Kit
16-9005	Seal Cap/Handle	D, N, and G (2 items); fits all sizes
16-9016	Stem Kit	X, T, W, and I

SAFETY WARNING

The valve should be installed, maintained, and serviced only by an experienced refrigeration professional. This includes reading and understanding pertinent product safety bulletins and installation instructions. Before servicing, the valve should be isolated from the system and all refrigerant evacuated from the piping. Avoid system arrangements that could cause thermal or pressure shock.

WARRANTY

All HANTEMP Controls products are warranted against defects in workmanship and materials for a period of one year from date of shipment from the factory. This warranty period is applicable only when products are properly applied, installed, operated, and serviced as specifically stated in HANTEMP Controls product bulletins unless otherwise approved in writing.

HANTEMP Controls
33 Chestnut Avenue, Westmont, IL, USA
(630) 537-1049
www.hantempcontrols.com

< TO PRODUCT PAGE